Oilless Air Compressors
Compresseurs D'Air Sans Huile
Compresores Sin Aceite

Replacement Parts List
Lista de Repuestos
Liste de Pièces de Rechange

WL650000, WL650100, WL604010, WL650200, WL650300, WL650400

For parts, products & service information visit
POWER XPERT
www.campbellhausfeld.com

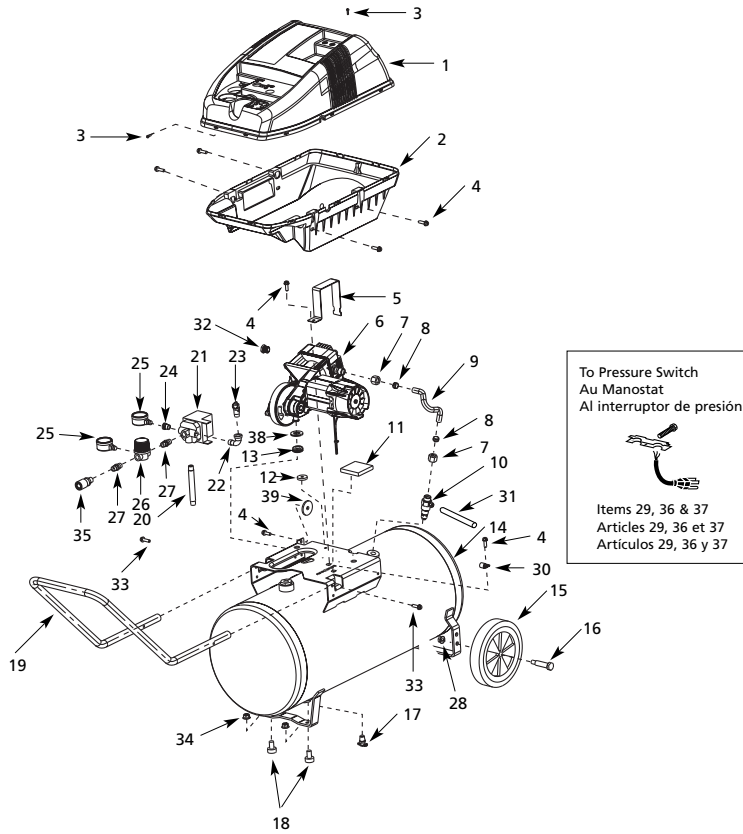

© 2000 Campbell Hausfeld

For Replacement Parts, Call 1-800-543-6400

Please provide the following information:
-Model number
-Serial number (if any)
-Part description and number as shown in parts list

Address parts correspondence to:

The Campbell Group
Attn: Parts Dept.
100 Production Drive
Harrison, OH 45030 USA

Ref. No.		Description	Part Number WL650000	WL650100	WL604010	Qty.
1		Top cover	WL008600AV	WL008600AV	WL008600AV	1
2		Lower cover	WL008500AV	WL008500AV	WL008500AV	1
3		Screw	ST074420AV	ST074420AV	ST074420AV	2
4		Screw	ST074415AV	ST074415AV	ST074415AV	7
5		Motor bracket	BA018300AV	BA018300AV	BA018300AV	1
6		Pump/motor assembly	WL390000AJ	WL390000AJ	WL390000AJ	1
7		Compression nut	ST033001AV	ST033001AV	ST033001AV	2
8		Rubber sleeve	ST067300AV	ST067300AV	ST067300AV	2
9		Exhaust tube	WL011200AP	WL011200AP	WL011200AP	1
10		Check valve	CV221506AJ	CV221506AJ	CV221506AJ	1
11	▲	Motor pad	WL007800AV	WL007800AV	WL007800AV	1
12	▲	Isolator	WL008100AV	WL008100AV	WL008100AV	1
13	▲	Grommet	WL008000AV	WL008000AV	WL008000AV	1
14		Tank	AR045000CG	AR045000CG	AR045000CG	1
15		Wheel	WA004700AV	WA004700AV	WA004700AV	2
16		Axle bolt	ST033400AV	ST033400AV	ST033400AV	2
17		Drain cock	D-1401	D-1401	D-1401	1
18		Foot	ST162600AV	ST162600AV	ST162600AV	2
19		Handle	HL004300AV	HL004300AV	HL004300AV	1
20		Pipe nipple	ST070307AV	ST070307AV	ST070307AV	1
21		Pressure switch	CW207589AV	CW207589AV	CW207589AV	1
22		Elbow	ST071202AV	ST071202AV	ST071202AV	1
23		Safety valve	V-215100AV	V-215100AV	V-215100AV	1
24		Adapter	ST071407AV	ST071407AV	ST071407AV	1
25		Gauge	GA016303AV	GA016303AV	GA016303AV	2
26		Regulator	RE206202AV	RE206202AV	RE206202AV	1
27		Nipple	HF007300AV	—	—	2
		Nipple	—	HF007300AV	HF007300AV	1
28		Nut	ST033500AV	ST033500AV	ST033500AV	2
29		Power cord with plug	EC012601AV	EC012601AV	EC012601AV	1
30		Clip	ST166800AV	ST166800AV	ST166800AV	1
31		Flexible tube	ST117804AV	ST117804AV	ST117804AV	1
32		Inlet tube	WL011800AV	WL011800AV	WL011800AV	1
33		Screw	ST073273AV	ST073273AV	ST073273AV	2
34		Nut	ST146000AV	ST146000AV	ST146000AV	2
35		Coupler	MP288300AV	—	—	1
36		Strain relief	CW000703AV	CW000703AV	CW000703AV	1
37		Strain relief screw	ST074418AV	ST074418AV	ST074418AV	1
38		Washer	ST070933AV	ST070933AV	ST070933AV	1
39		Washer	ST077311AV	ST077311AV	ST077311AV	1
REPLACEMENT PARTS KITS						
	▲	Isolator kit				
		(Includes #11, 12, 13)	WL211300AJ	WL211300AJ	WL211300AJ	1

For Replacement Parts, Call 1-800-543-6400

Please provide the following information:
-Model number
-Serial number (if any)
-Part description and number as shown in parts list

Address parts correspondence to:

The Campbell Group
Attn: Parts Dept.
100 Production Drive
Harrison, OH 45030 USA

Ref. No.		Description	Part Number WL650200	WL650300	WL650400	Qty.
1		Top cover	WL008600AV	WL008600AV	WL008600AV	1
2		Lower cover	WL008500AV	WL008500AV	WL008500AV	1
3		Screw	ST074420AV	ST074420AV	ST074420AV	2
4		Screw	ST074415AV	ST074415AV	ST074415AV	7
5		Motor bracket	BA018300AV	BA018300AV	BA018300AV	1
6		Pump/motor assembly	WL390000AJ	WL390000AJ	WL390000AJ	1
7		Compression nut	ST033001AV	ST033001AV	ST033001AV	2
8		Rubber sleeve	ST067300AV	ST067300AV	ST067300AV	2
9		Exhaust tube	WL011200AP	WL011200AP	WL011200AP	1
10		Check valve	CV221506AJ	CV221506AJ	CV221506AJ	1
11	▲	Motor pad	WL007800AV	WL007800AV	WL007800AV	1
12	▲	Isolator	WL008100AV	WL008100AV	WL008100AV	1
13	▲	Grommet	WL008000AV	WL008000AV	WL008000AV	1
14		Tank	AR045300CG	AR045400CG	AR045500CG	1
15		Wheel	WA004700AV	WA004700AV	WA004700AV	2
16		Axle bolt	ST033400AV	ST033400AV	ST033400AV	2
17		Drain cock	D-1401	D-1401	D-1401	1
18		Foot	ST162600AV	ST162600AV	ST162600AV	2
19		Handle	HL004300AV	HL004300AV	HL004300AV	1
20		Pipe nipple	ST070307AV	ST070307AV	ST070307AV	1
21		Pressure switch	CW207589AV	CW207589AV	CW207589AV	1
22		Elbow	ST071202AV	ST071202AV	ST071202AV	1
23		Safety valve	V-215100AV	V-215100AV	V-215100AV	1
24		Adapter	ST071407AV	ST071407AV	ST071407AV	1
25		Gauge	GA016303AV	GA016303AV	GA016303AV	2
26		Regulator	RE206202AV	RE206202AV	RE206202AV	1
27		Nipple	HF007300AV	HF007300AV	HF007300AV	1
28		Nut	ST033500AV	ST033500AV	ST033500AV	1
29		Power cord with plug	EC012601AV	EC012601AV	EC012601AV	1
30		Clip	ST166800AV	ST166800AV	ST166800AV	1
31		Flexible tube	ST117804AV	ST117804AV	ST117804AV	1
32		Inlet tube	WL011800AV	WL011800AV	WL011800AV	1
33		Screw	ST073273AV	ST073273AV	ST073273AV	2
34		Nut	ST146000AV	ST146000AV	ST146000AV	2
35		Coupler	—	—	—	1
36		Strain relief	CW000703AV	CW000703AV	CW000703AV	1
37		Strain relief screw	ST074418AV	ST074418AV	ST074418AV	1
38		Washer	ST070933AV	ST070933AV	ST070933AV	1
39		Washer	ST077311AV	ST077311AV	ST077311AV	1
REPLACEMENT PARTS KITS						
	▲	Isolator kit (Includes #11, 12, 13)	WL211300AJ	WL211300AJ	WL211300AJ	1

Para Ordenar Repuestos, Sírvase Llamar al Distribuidor más Cercano a su Domicilio

Sírvase darnos la siguiente información:
-Número del modelo
-Número de serie (de haberlo)
-Descripción y número del repuesto según la lista de repuestos

Puede escribirnos a:
The Campbell Group
Attn: Parts Dept.
100 Production Drive
Harrison, OH 45030 USA

No. de Ref.		Description	Número de Pieza WL650000	WL650100	WL604010	Ctd.
1		Cubierta superior	WL008600AV	WL008600AV	WL008600AV	1
2		Cubierta inferior	WL008500AV	WL008500AV	WL008500AV	1
3		Tornillo	ST074420AV	ST074420AV	ST074420AV	2
4		Tornillo	ST074415AV	ST074415AV	ST074415AV	7
5		Soporte del motor	BA018300AV	BA018300AV	BA018300AV	1
6		Ensamble bomba/motor	WL390000AJ	WL390000AJ	WL390000AJ	1
7		Tuerca de compresión	ST033001AV	ST033001AV	ST033001AV	2
8		Manga de caucho	ST067300AV	ST067300AV	ST067300AV	2
9		Tubo de escape	WL011200AP	WL011200AP	WL011200AP	1
10		Válvula de chequeo	CV221506AJ	CV221506AJ	CV221506AJ	1
11	▲	Almohadilla del motor	WL007800AV	WL007800AV	WL007800AV	1
12	▲	Aislador	WL008100AV	WL008100AV	WL008100AV	1
13	▲	Ojal	WL008000AV	WL008000AV	WL008000AV	1
14		Tanque	AR045000CG	AR045000CG	AR045000CG	1
15		Rueda	WA004700AV	WA004700AV	WA004700AV	2
16		Perno del eje	ST033400AV	ST033400AV	ST033400AV	2
17		Llave de drenaje	D-1401	D-1401	D-1401	1
18		Pata	ST162600AV	ST162600AV	ST162600AV	2
19		Mango	HL004300AV	HL004300AV	HL004300AV	1
20		Niple para tuberías	ST070307AV	ST070307AV	ST070307AV	1
21		Presostato	CW207589AV	CW207589AV	CW207589AV	1
22		Codo	ST071202AV	ST071202AV	ST071202AV	1
23		Válvula de seguridad	V-215100AV	V-215100AV	V-215100AV	1
24		Adaptador	ST071407AV	ST071407AV	ST071407AV	1
25		Manómetro	GA016303AV	GA016303AV	GA016303AV	2
26		Regulador	RE206202AV	RE206202AV	RE206202AV	1
27		Niple	HF007300AV	—	—	2
		Niple	—	HF007300AV	HF007300AV	1
28		Tuerca	ST033500AV	ST033500AV	ST033500AV	2
29		Cordón eléctrico con enchufe	EC012601AV	EC012601AV	EC012601AV	1
30		Sujetador	ST166800AV	ST166800AV	ST166800AV	1
31		Tubo flexible	ST117804AV	ST117804AV	ST117804AV	1
32		Tubo de entrada	WL011800AV	WL011800AV	WL011800AV	1
33		Tornillo	ST073273AV	ST073273AV	ST073273AV	2
34		Tuerca	ST146000AV	ST146000AV	ST146000AV	2
35		Acoplador	MP288300AV	—	—	1
36		Relevo de tensión	CW000703AV	CW000703AV	CW000703AV	1
37		Tornillo del relevo de tensión	ST074418AV	ST074418AV	ST074418AV	1
38		Arandela	ST070933AV	ST070933AV	ST070933AV	1
39		Arandela	ST077311AV	ST077311AV	ST077311AV	1
LISTA DE REPUESTOS						
	▲	Kit de aislador (Incluye #11, 12, 13)	WL211300AJ	WL211300AJ	WL211300AJ	1

Para Ordenar Repuestos, Sírvase Llamar al Distribuidor más Cercano a su Domicilio

Sírvase darnos la siguiente información:
-Número del modelo
-Número de serie (de haberlo)
-Descripción y número del repuesto según la lista de repuestos

Puede escribirnos a:
The Campbell Group
Attn: Parts Dept.
100 Production Drive
Harrison, OH 45030 USA

No. de Ref.		Description	Número de Pieza WL650200	WL650300	WL650400	Ctd.
1		Cubierta superior	WL008600AV	WL008600AV	WL008600AV	1
2		Cubierta inferior	WL008500AV	WL008500AV	WL008500AV	1
3		Tornillo	ST074420AV	ST074420AV	ST074420AV	2
4		Tornillo	ST074415AV	ST074415AV	ST074415AV	7
5		Soporte del motor	BA018300AV	BA018300AV	BA018300AV	1
6		Ensamble bomba/motor	WL390000AJ	WL390000AJ	WL390000AJ	1
7		Tuerca de compresión	ST033001AV	ST033001AV	ST033001AV	2
8		Manga de caucho	ST067300AV	ST067300AV	ST067300AV	2
9		Tubo de escape	WL011200AP	WL011200AP	WL011200AP	1
10		Válvula de chequeo	CV221506AJ	CV221506AJ	CV221506AJ	1
11	▲	Almohadilla del motor	WL007800AV	WL007800AV	WL007800AV	1
12	▲	Aislador	WL008100AV	WL008100AV	WL008100AV	1
13	▲	Ojal	WL008000AV	WL008000AV	WL008000AV	1
14		Tanque	AR045300CG	AR045400CG	AR045500CG	1
15		Rueda	WA004700AV	WA004700AV	WA004700AV	2
16		Perno del eje	ST033400AV	ST033400AV	ST033400AV	2
17		Llave de drenaje	D-1401	D-1401	D-1401	1
18		Pata	ST162600AV	ST162600AV	ST162600AV	2
19		Mango	HL004300AV	HL004300AV	HL004300AV	1
20		Niple para tuberías	ST070307AV	ST070307AV	ST070307AV	1
21		Presostato	CW207589AV	CW207589AV	CW207589AV	1
22		Codo	ST071202AV	ST071202AV	ST071202AV	1
23		Válvula de seguridad	V-215100AV	V-215100AV	V-215100AV	1
24		Adaptador	ST071407AV	ST071407AV	ST071407AV	1
25		Manómetro	GA016303AV	GA016303AV	GA016303AV	2
26		Regulador	RE206202AV	RE206202AV	RE206202AV	1
27		Niple	HF007300AV	HF007300AV	HF007300AV	1
28		Tuerca	ST033500AV	ST033500AV	ST033500AV	2
29		Cordón eléctrico con enchufe	EC012601AV	EC012601AV	EC012601AV	1
30		Sujetador	ST166800AV	ST166800AV	ST166800AV	1
31		Tubo flexible	ST117804AV	ST117804AV	ST117804AV	1
32		Tubo de entrada	WL011800AV	WL011800AV	WL011800AV	1
33		Tornillo	ST073273AV	ST073273AV	ST073273AV	2
34		Tuerca	ST146000AV	ST146000AV	ST146000AV	2
35		Acoplador	—	—	—	1
36		Relevo de tensión	CW000703AV	CW000703AV	CW000703AV	1
37		Tornillo del relevo de tensión	ST074418AV	ST074418AV	ST074418AV	1
38		Arandela	ST070933AV	ST070933AV	ST070933AV	1
39		Arandela	ST077311AV	ST077311AV	ST077311AV	1
LISTA DE REPUESTOS						
	▲	Kit de aislador (Incluye #11, 12, 13)	WL211300AJ	WL211300AJ	WL211300AJ	1

Pour Pièces de Rechange, Composer le 1-800-543-6400

S'il vous plaît fournir l'information suivante:
-Numéro du modèle
-Numéro de série (s'il y en a un)
-Description de la pièce et son numéro sur la liste

Correspondance:

The Campbell Group
Attn: Parts Dept.
100 Production Drive
Harrison, OH 45030 USA

			Numéro de Piece			
Nº. Réf.		Descripción	WL650200	WL650300	WL650400	Qté.
1		Couvercle supérieur	WL008600AV	WL008600AV	WL008600AV	1
2		Couvercle inférieur	WL008500AV	WL008500AV	WL008500AV	1
3		Vis	ST074420AV	ST074420AV	ST074420AV	2
4		Vis	ST074415AV	ST074415AV	ST074415AV	7
5		Support de moteur	BA018300AV	BA018300AV	BA018300AV	1
6		Montage de pompe/moteur	WL390000AJ	WL390000AJ	WL390000AJ	1
7		Écrou de compression	ST033001AV	ST033001AV	ST033001AV	2
8		Manchon en caoutchouc	ST067300AV	ST067300AV	ST067300AV	2
9		Tuyau d'échappement	WL011200AP	WL011200AP	WL011200AP	1
10		Clapet	CV221506AJ	CV221506AJ	CV221506AJ	1
11	▲	Tampon de moteur	WL007800AV	WL007800AV	WL007800AV	1
12	▲	Isolateur	WL008100AV	WL008100AV	WL008100AV	1
13	▲	Anneau	WL008000AV	WL008000AV	WL008000AV	1
14		Réservoir	AR045300CG	AR045400CG	AR045500CG	1
15		Roue	WA004700AV	WA004700AV	WA004700AV	2
16		Boulon d'arbre de roue	ST033400AV	ST033400AV	ST033400AV	2
17		Robinet de vidange	D-1401	D-1401	D-1401	1
18		Pied	ST162600AV	ST162600AV	ST162600AV	2
19		Manche	HL004300AV	HL004300AV	HL004300AV	1
20		Mamelon de tuyau	ST070307AV	ST070307AV	ST070307AV	1
21		Manostat	CW207589AV	CW207589AV	CW207589AV	1
22		Coude	ST071202AV	ST071202AV	ST071202AV	1
23		Soupape de sûreté	V-215100AV	V-215100AV	V-215100AV	1
24		Adaptateur	ST071407AV	ST071407AV	ST071407AV	1
25		Manomètre	GA016303AV	GA016303AV	GA016303AV	2
26		Régulateur	RE206202AV	RE206202AV	RE206202AV	1
27		Raccord	HF007300AV	HF007300AV	HF007300AV	1
28		Écrou	ST033500AV	ST033500AV	ST033500AV	2
29		Cordon d'alimentation avec fiche	EC012601AV	EC012601AV	EC012601AV	1
30		Attache	ST166800AV	ST166800AV	ST166800AV	1
31		Tuyau flexible	ST117804AV	ST117804AV	ST117804AV	1
32		Tuyau d'arrivée	WL011800AV	WL011800AV	WL011800AV	1
33		Vis	ST073273AV	ST073273AV	ST073273AV	2
34		Écrou	ST146000AV	ST146000AV	ST146000AV	2
35		Raccord	—	—	—	1
36		Soulagement de tension	CW000703AV	CW000703AV	CW000703AV	1
37		Vis de soulagement de tension	ST074418AV	ST074418AV	ST074418AV	1
38		Rondelle	ST070933AV	ST070933AV	ST070933AV	1
39		Rondelle	ST077311AV	ST077311AV	ST077311AV	1
NÉCESSAIRES DE PIÈCES DE RECHANGE						
	▲	Nécessaire d'isolation (#11, 12, 13 compris)	WL211300AJ	WL211300AJ	WL211300AJ	1

Pour Pièces de Rechange, Composer le 1-800-543-6400

S'il vous plaît fournir l'information suivante:
-Numéro du modèle
-Numéro de série (s'il y en a un)
-Description de la pièce et son numéro sur la liste

Correspondance:

The Campbell Group
Attn: Parts Dept.
100 Production Drive
Harrison, OH 45030 USA

			Numéro de Piece			
Nº. Réf.		Descripción	WL650000	WL650100	WL604010	Qté.
1		Couvercle supérieur	WL008600AV	WL008600AV	WL008600AV	1
2		Couvercle inférieur	WL008500AV	WL008500AV	WL008500AV	1
3		Vis	ST074420AV	ST074420AV	ST074420AV	2
4		Vis	ST074415AV	ST074415AV	ST074415AV	7
5		Support de moteur	BA018300AV	BA018300AV	BA018300AV	1
6		Montage de pompe/moteur	WL390000AJ	WL390000AJ	WL390000AJ	1
7		Écrou de compression	ST033001AV	ST033001AV	ST033001AV	2
8		Manchon en caoutchouc	ST067300AV	ST067300AV	ST067300AV	2
9		Tuyau d'échappement	WL011200AP	WL011200AP	WL011200AP	1
10		Clapet	CV221506AJ	CV221506AJ	CV221506AJ	1
11	▲	Tampon de moteur	WL007800AV	WL007800AV	WL007800AV	1
12	▲	Isolateur	WL008100AV	WL008100AV	WL008100AV	1
13	▲	Anneau	WL008000AV	WL008000AV	WL008000AV	1
14		Réservoir	AR045000CG	AR045000CG	AR045000CG	1
15		Roue	WA004700AV	WA004700AV	WA004700AV	2
16		Boulon d'arbre de roue	ST033400AV	ST033400AV	ST033400AV	2
17		Robinet de vidange	D-1401	D-1401	D-1401	1
18		Pied	ST162600AV	ST162600AV	ST162600AV	2
19		Manche	HL004300AV	HL004300AV	HL004300AV	1
20		Mamelon de tuyau	ST070307AV	ST070307AV	ST070307AV	1
21		Manostat	CW207589AV	CW207589AV	CW207589AV	1
22		Coude	ST071202AV	ST071202AV	ST071202AV	1
23		Soupape de sûreté	V-215100AV	V-215100AV	V-215100AV	1
24		Adaptateur	ST071407AV	ST071407AV	ST071407AV	1
25		Manomètre	GA016303AV	GA016303AV	GA016303AV	2
26		Régulateur	RE206202AV	RE206202AV	RE206202AV	1
27		Raccord	HF007300AV	—	—	2
		Raccord	—	HF007300AV	HF007300AV	1
28		Écrou	ST033500AV	ST033500AV	ST033500AV	2
29		Cordon d'alimentation avec fiche	EC012601AV	EC012601AV	EC012601AV	1
30		Attache	ST166800AV	ST166800AV	ST166800AV	1
31		Tuyau flexible	ST117804AV	ST117804AV	ST117804AV	1
32		Tuyau d'arrivée	WL011800AV	WL011800AV	WL011800AV	1
33		Vis	ST073273AV	ST073273AV	ST073273AV	2
34		Écrou	ST146000AV	ST146000AV	ST146000AV	2
35		Raccord	MP288300AV	—	—	1
36		Soulagement de tension	CW000703AV	CW000703AV	CW000703AV	1
37		Vis de soulagement de tension	ST074418AV	ST074418AV	ST074418AV	1
38		Rondelle	ST070933AV	ST070933AV	ST070933AV	1
39		Rondelle	ST077311AV	ST077311AV	ST077311AV	1
NÉCESSAIRES DE PIÈCES DE RECHANGE						
	▲	Nécessaire d'isolation (#11, 12, 13 compris)	WL211300AJ	WL211300AJ	WL211300AJ	1

Oilless Single Cylinder Pump
Pompe Monocylindrique Sans Huile
Bomba De Un Cilindro Sin Aceite

Replacement Parts List
Liste de Pièces de Rechange
Lista de Repuestos

WL390000

For parts, products & service information visit
POWER XPERT
www.campbellhausfeld.com

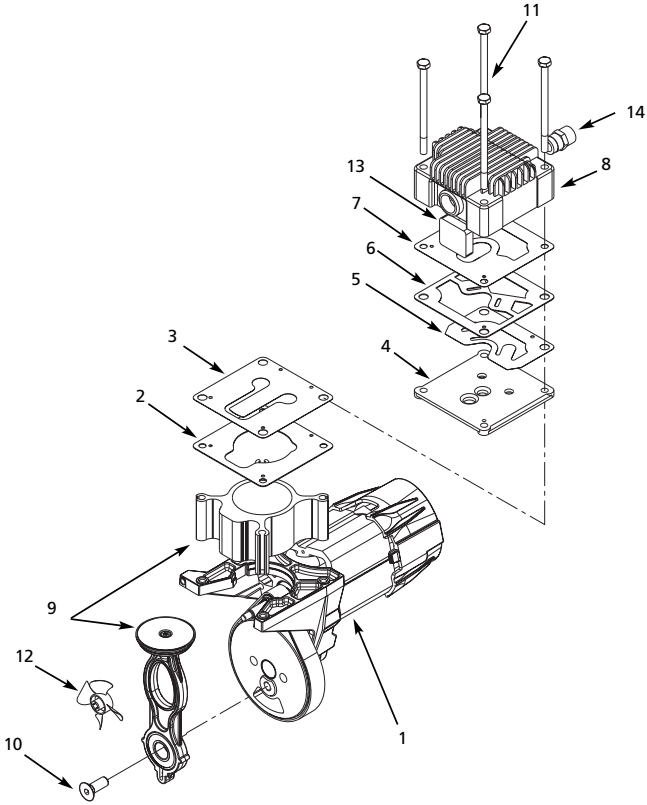

@ 2000 Campbell Hausfeld

For parts, product & service information
visit **www.campbellhausfeld.com**

IN226301AV 5/00

Replacement Parts List
Liste de Pièces de Rechange
Lista de Repuestos

WL390000

For Replacement Parts, Call 1-800-543-6400
Pour Pièces de Rechange, Composer le 1-800-543-6400
Para Ordenar Repuestos, Sírvase Llamar al Distribuidor más Cercano a su Domicilio

Please provide the following information:
-Model number
-Serial number (if any)
-Part description and number as shown in parts list

S'il vous plaît fournir l'information suivante:
-Numéro du modèle
-Numéro de série (s'il y en a un)
-Description de la pièce et son numéro sur la liste

Sírvase darnos la siguiente información:
-Número del modelo
-Número de serie (de haberlo)
-Descripción y número del repuesto según la lista de repuestos

Address parts correspondence to:
Correspondance:
Puede escribirnos a:

The Campbell Group
Attn: Parts Dept.
100 Production Drive
Harrison, OH 45030 USA

Ref. No. Nº. de Réf. No. de Ref.		Description Description Description	Part Number Numéro de Pièce Número de Pieza	Qty. Qté. Ctd.
1		Pump/motor assembly (with belt) Montage de pompe/moteur (avec courroie) Conjunto bomba/motor (con correa)	WL210900AJ	1
2	▲	Cylinder gasket Joint d'étanchéité de cylindre Empaque del cilindro	XA012400AV	1
3		Intake valve Soupape d'admission Válvula de entrada	▲	1
4		Valve plate Plaque de soupape Placa de la válvula	▲	1
5		Exhaust valve Soupape d'échappement Válvula de salida	▲	1
6	▲	Head gasket Joint d'étanchéité de culasse Empaque de la culata	XA010800AV	1
7	▲	Exhaust valve gasket Joint de soupape d'échappement Empaque de la válvula de salida	XA012500AV	1
8		Head Culasse Culata	WL010500AV	1
9		Piston assembly (Includes #10) Montage de piston (#10 compris) Ensamblaje de pistón (Incluye #10)	WL211000AJ	1
10		3/8" Flat head screw Vis à tête plate de 3/8 po Tornillo de cabeza plana de 9,5 mm (3/8")	ST071802AV	1
11	●	1/4"-20 x 4" Hex. head cap screw Vis a tete hex. de 1/4 po-20 x 4 po Tornillo hex. de 6,4 mm (1/4")-20 x 10,16 cm (4")	ST074319AV	4
12		Fan Ventilateur Ventilador	WL008400AV	1
13	▲	Muffler Silencieux Silenciador	WL011100AV	1
14		Compression connector Raccord de compression Conector de compresión	ST159001AV	1
REPLACEMENT PARTS KITS - JEUX DE PIÈCES DE RECHANGE - KIT DE PIEZAS DE REPUESTO				
●		Head bolt kit (Set of 4 ea., part #11) Jeu de boulons à tête (4 chaque, pièce #11) Kit de prisioneros (Juego de 4 cada uno., pieza #11)	WL211100AJ	1
▲		Valve plate kit (Includes #2-7, 13) Jeu de plaque de soupape (#2-7, 13 compris) Kit de placa de válvula (Incluye #2-7, 13)	WL211200AJ	1